GROUND PLAN (1:25)

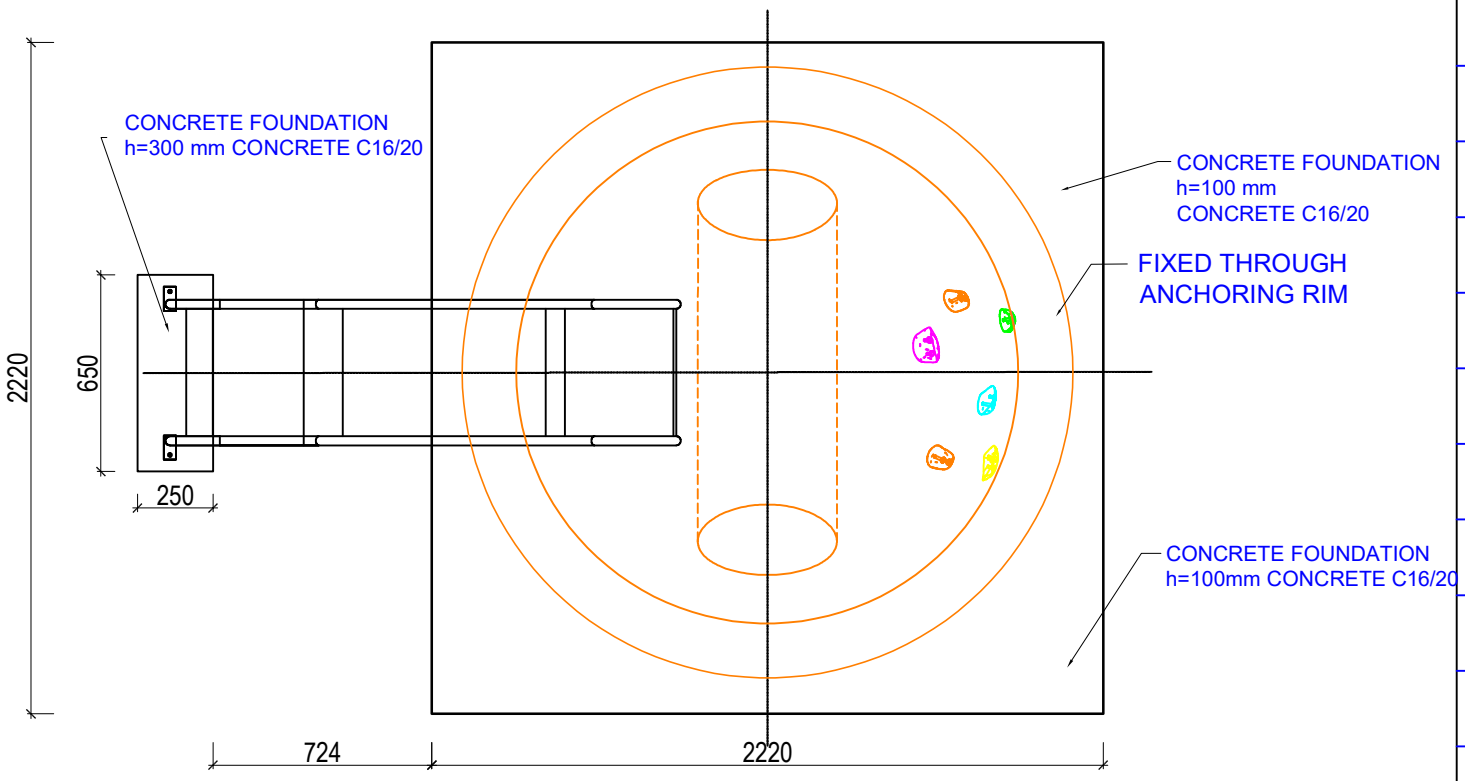

SECTION
(1:25)

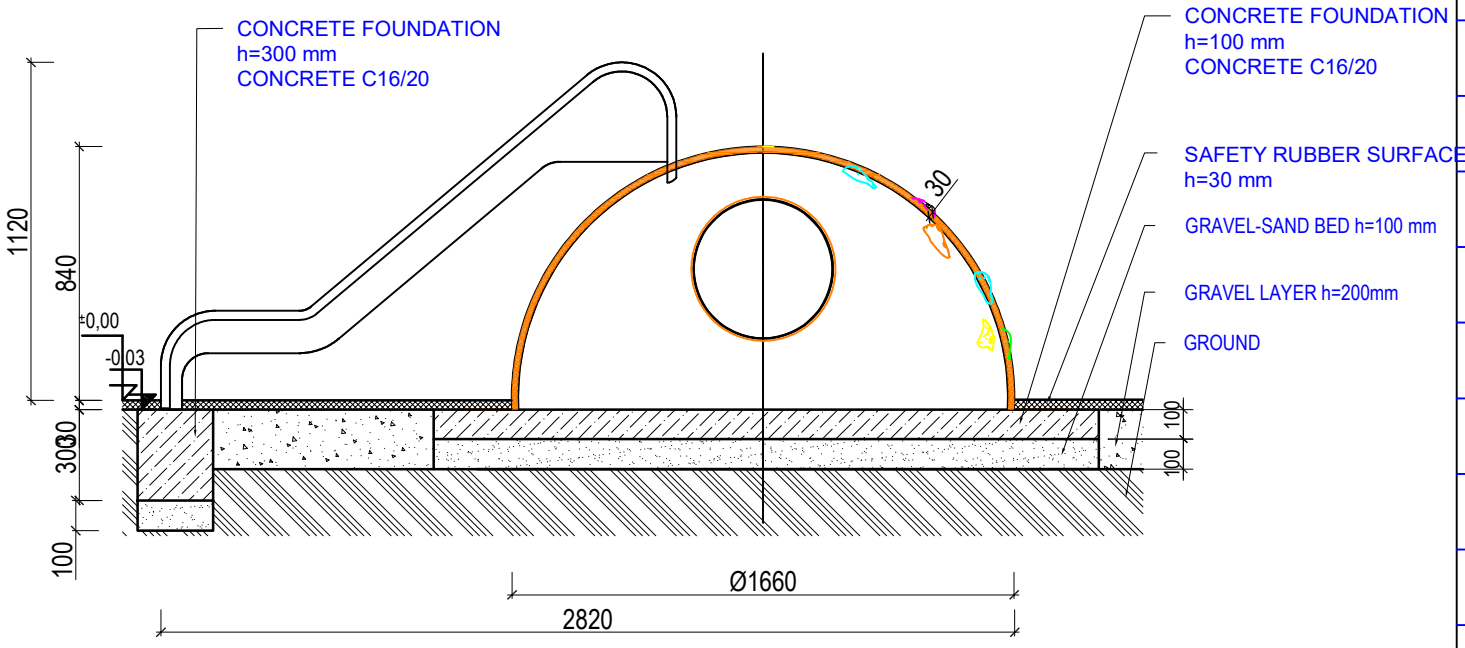

Author:		3D PROGRAM, s.r.o. Objízdná 1911 765 02 Otrokovice Tel: 602 500 045 Email: info@3dprogram.eu	
Daniel Naď			
TECHNICAL DRAWING		Certified according to	EN71 , EN1176
		Date of issue	17.2.2024
E19, E19t - HILL XL with slide		M 1:25	format 1xA4
Foundation - ground plan and section		E19_EN.dwg	revision 0

ANCHORING DETAIL (1:10)

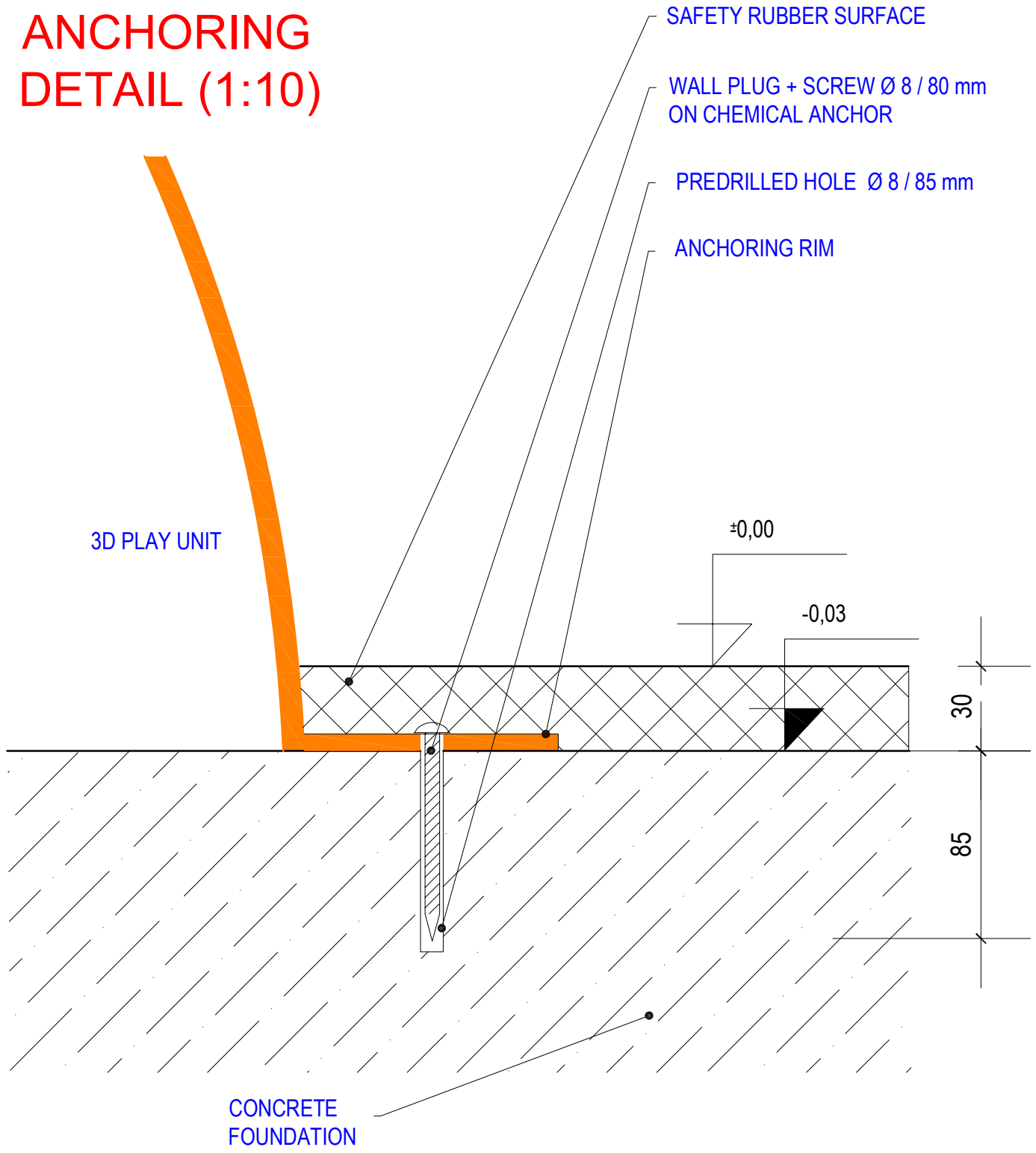

Vypracoval:		3D PROGRAM, s.r.o. Objízdná 1911 765 02 Otrokovice Tel: 602 500 045 Email: info@3dprogram.eu	
Daniel Naď			
TECHNICAL DRAWING		Certified according to	EN11, EN1176
		Date of issue	17.02.2024
E19, E19t - HILL XL with slide		M 1:2	format 1xA4
Foundation - anchoring detail		E19_EN.dwg	revision 0